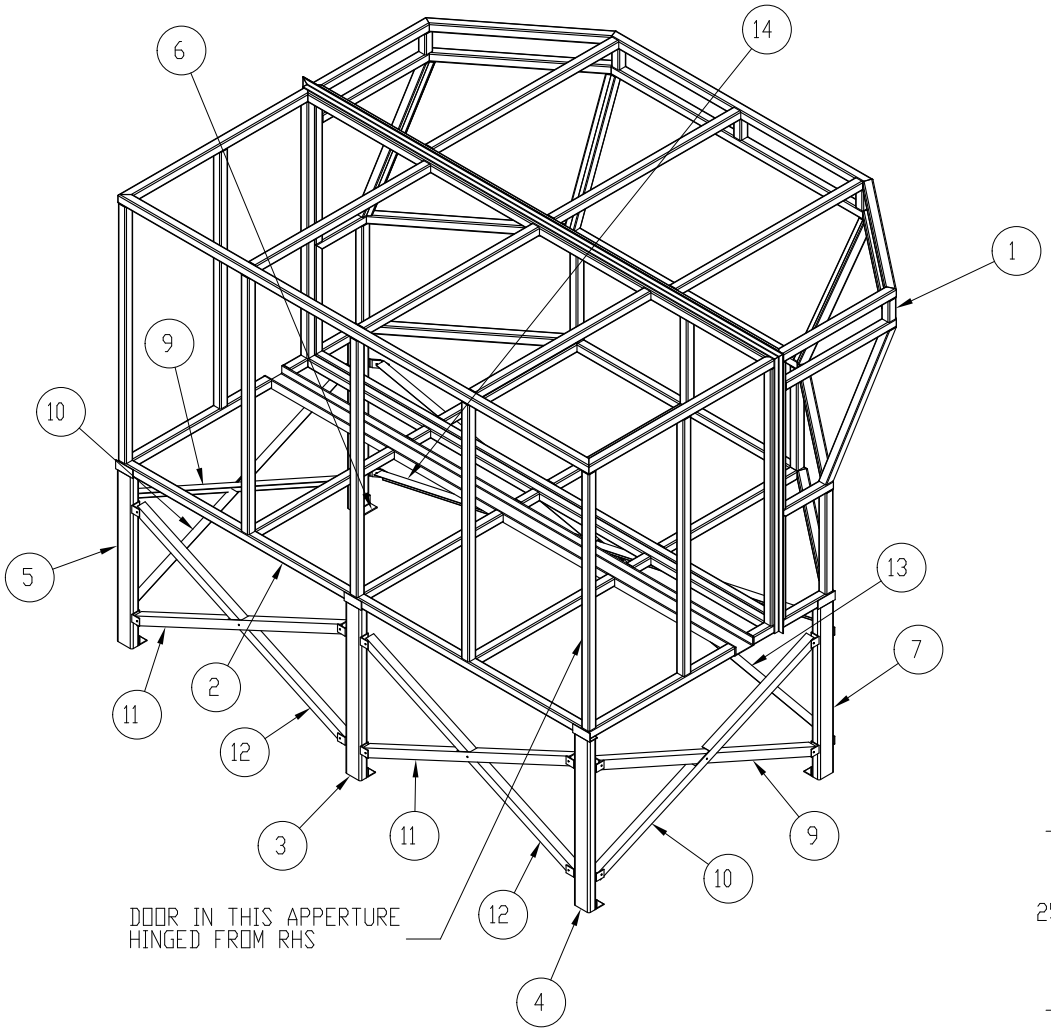

ITEM NO.	PART NUMBER	DESCRIPTION	QTY.
1	WHF00174	ACOUSTICABS PULPIT FRT FRAME ASSY	1
2	WHF00172	ACOUSTICABS PULPIT REAR FRAME	1
3	WHF00186	ACOUSTICABS POST SUPPORT	1
4	WHF00187	ACOUSTICABS POST SUPPORT RH REAR	1
5	WHF00188	ACOUSTICABS POST SUPPORT LH REAR	1
6	WHF00189	ACOUSTICABS POST SUPPORT LH	1
7	WHF00190	ACOUSTICABS POST SUPPORT RH	1
8	WHF00232	ACOUSTICABS TIE BRACKET	4
9	WHF00244	ACOUSTICABS SIDE BRACE	2
10	WHF00245	ACOUSTICABS SIDE BRACE WITH CUTOUT	2
11	WHF00246	ACOUSTICABS REAR BRACE WITH CUTOUT	2
12	WHF00247	ACOUSTICABS REAR BRACE	2
13	WHF00248	ACOUSTICABS FRT BRACE WITH CUTOUT	1
14	WHF00249	ACOUSTICABS FRT BRACE	1

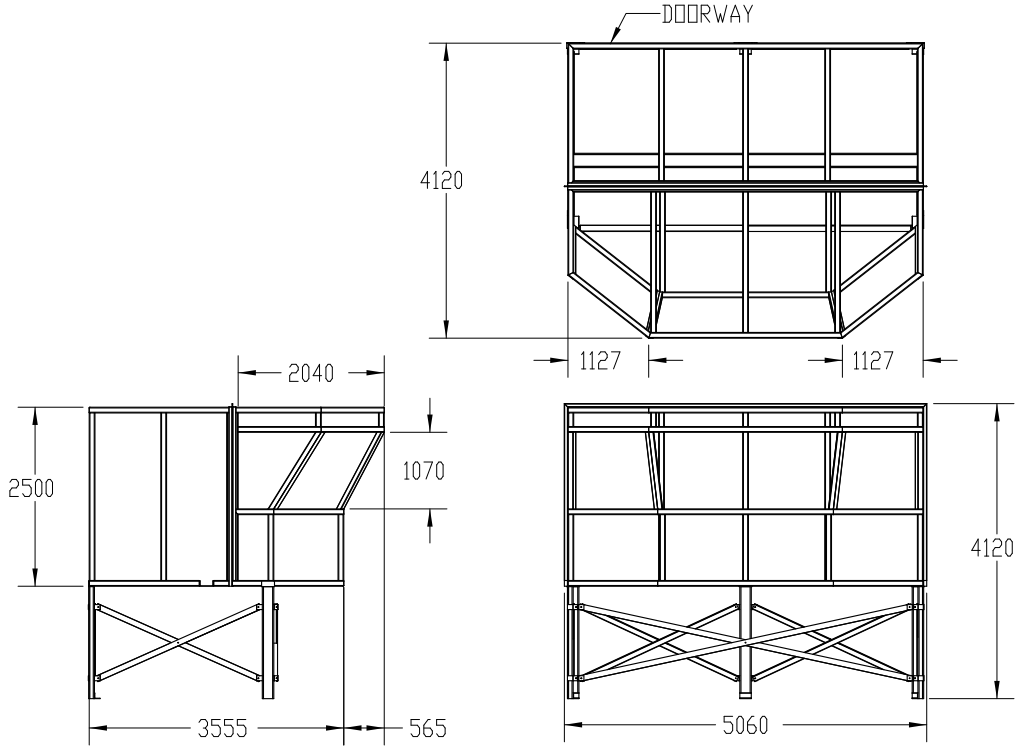

UNLESS OTHERWISE SPECIFIED:
DIMENSIONS ARE IN MILLIMETERS
SURFACE FINISH:
TOLERANCES:
LINEAR:
ANGULAR:

FINISH:

DEBUR AND BREAK SHARP EDGES

DO NOT SCALE DRAWING

REVISION 002

ACOUSTICABS IND NOISE CONTROL LTD

	NAME	SIGNATURE	DATE
DRAWN	CHRIS ALLENBY		15/04/09
CHK'D			
APPV'D			
MFG			
Q.A			

TITLE:

ACOUSTIC PULPIT

MATERIAL:

WEIGHT:

DWG NO.

A3

SCALE:1:75

SHEET 1 OF 1